s.r.l. GORLA
MORSETTERIE
MILANO

TECHNICAL OFFICE

CONNECTOR
FOR Al TUBE RUN AND Al FLAT

DRG. N. 84/AA/X

Rev.1 dated 19.03.08

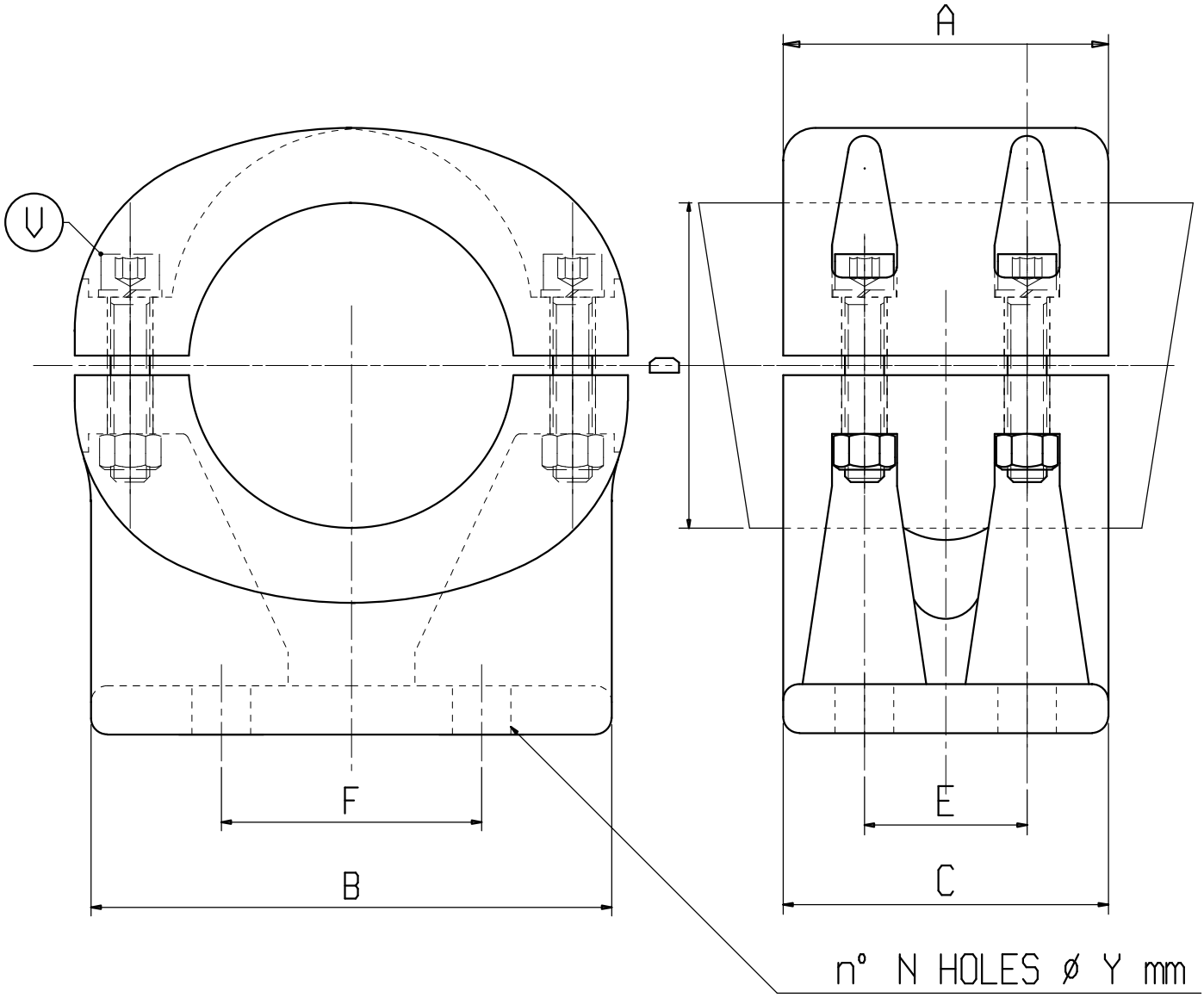

Material: Aluminium alloy
Bolts: Stainless steel

X	ø COND. D	A	B	C	E	F	N	Y	V	X	ø COND. D	A	B	C	E	F	N	Y	V
C 1247	100	100	160	100	50	80	4	18	M12										
C 0266	120	100	160	100	50	80	4	18	M12										