s.r.l. GORLA
MORSETTERIE
MILANO

TECHNICAL OFFICE

90° TERMINAL
FOR Cu CONDUCTOR
FOR Cu PLATE

DRG. N. 56/BB/X

Rev.1 dated 10.10.07

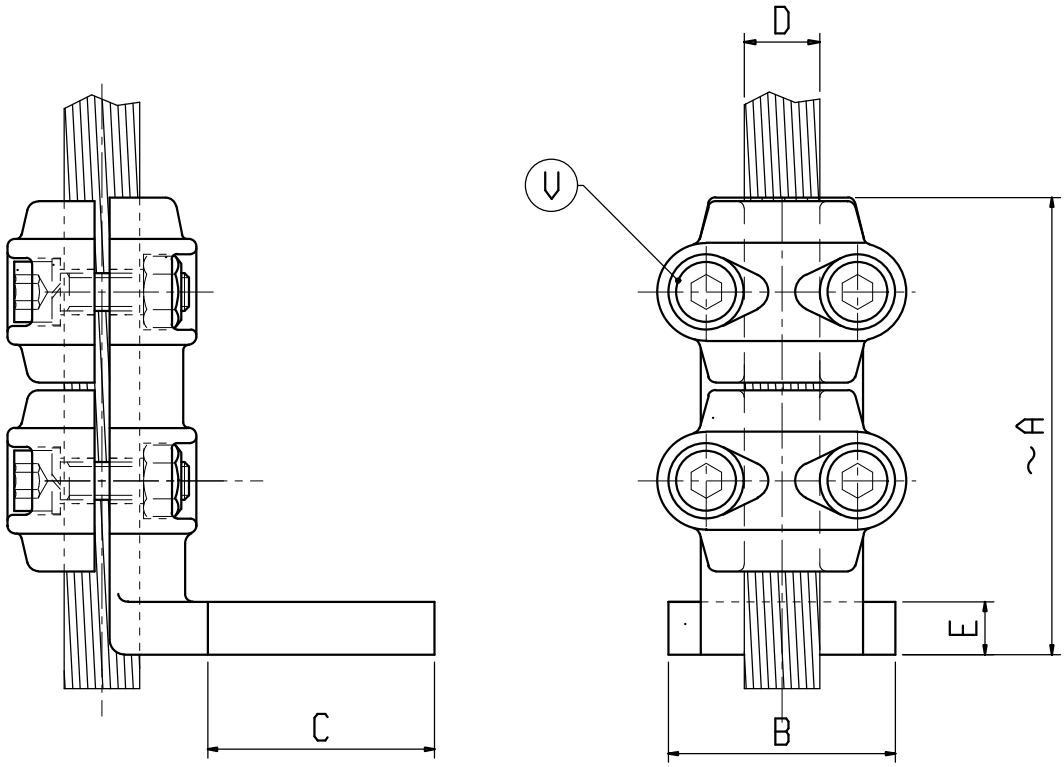

Material: Copper alloy

X	ø COND. D	A	B	C	E	V	X	ø COND. D	A	B	C	E	V
C 6538BR	25-32	120	60	60	14	M10							
C 6578BR	25-32	120	100	100	15	M10							
C 6091BR	36-40	122	60	60	12	M10							