s.r.l. GORLA MORSETTERIE MILANO TECHNICAL OFFICE	STRAIGHT CONNECTOR FOR Al FLAT AND DOUBLE Al CONDUCTOR COMPRESSION TYPE	DRG. N. 55/AA/X SCALE . DRAWN . / DATE . APPROVED . / DATE .

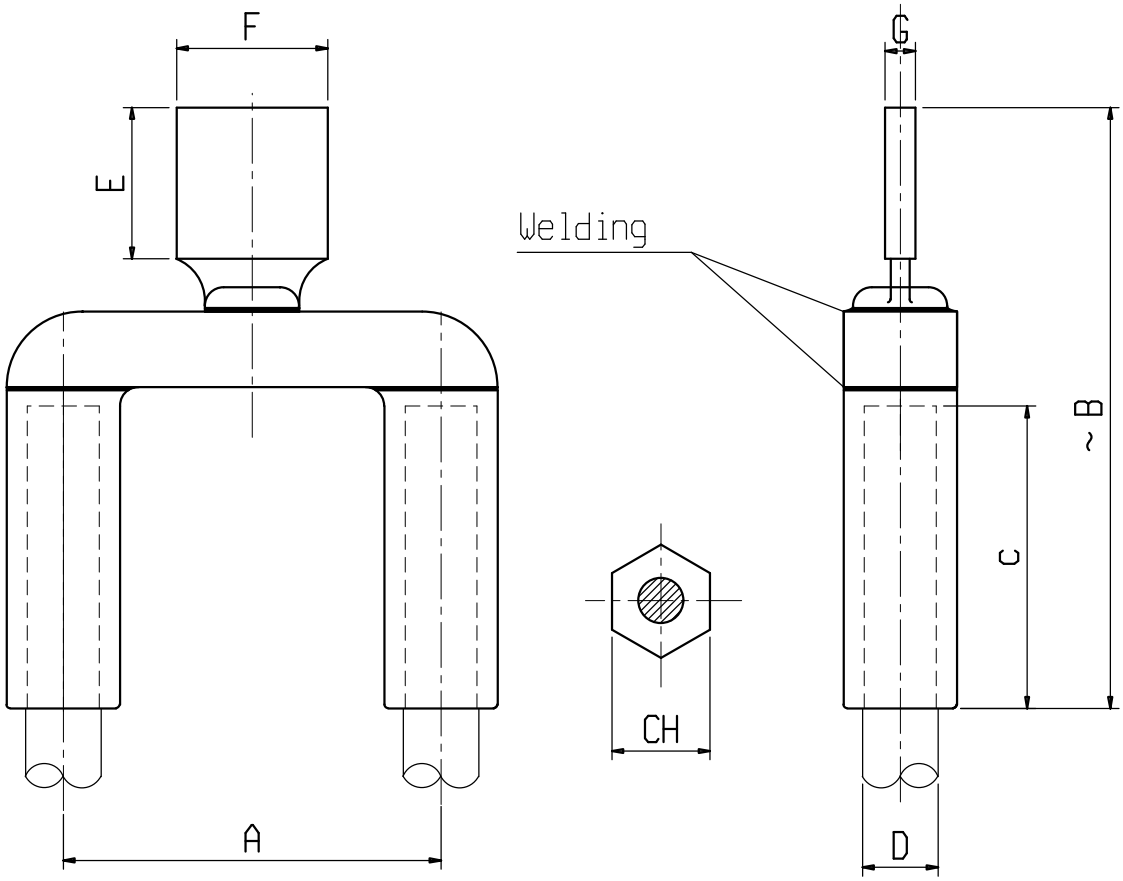

Material: Aluminium alloy

X	ø COND. D	A	B	C	E	F	G	CH	X	ø COND. D	A	B	C	E	F	G	CH
C1332AAC	35-37	200	350	160	100	80	16	54									