s.r.l. GORLA MORSETTERIE MILANO TECHNICAL OFFICE	STRAIGHT CONNECTOR FOR Al FLAT AND DOUBLE Al CONDUCTOR	DRG. N. 53/AA/X SCALE . DRAWN . / DATE . APPROVED . / DATE .

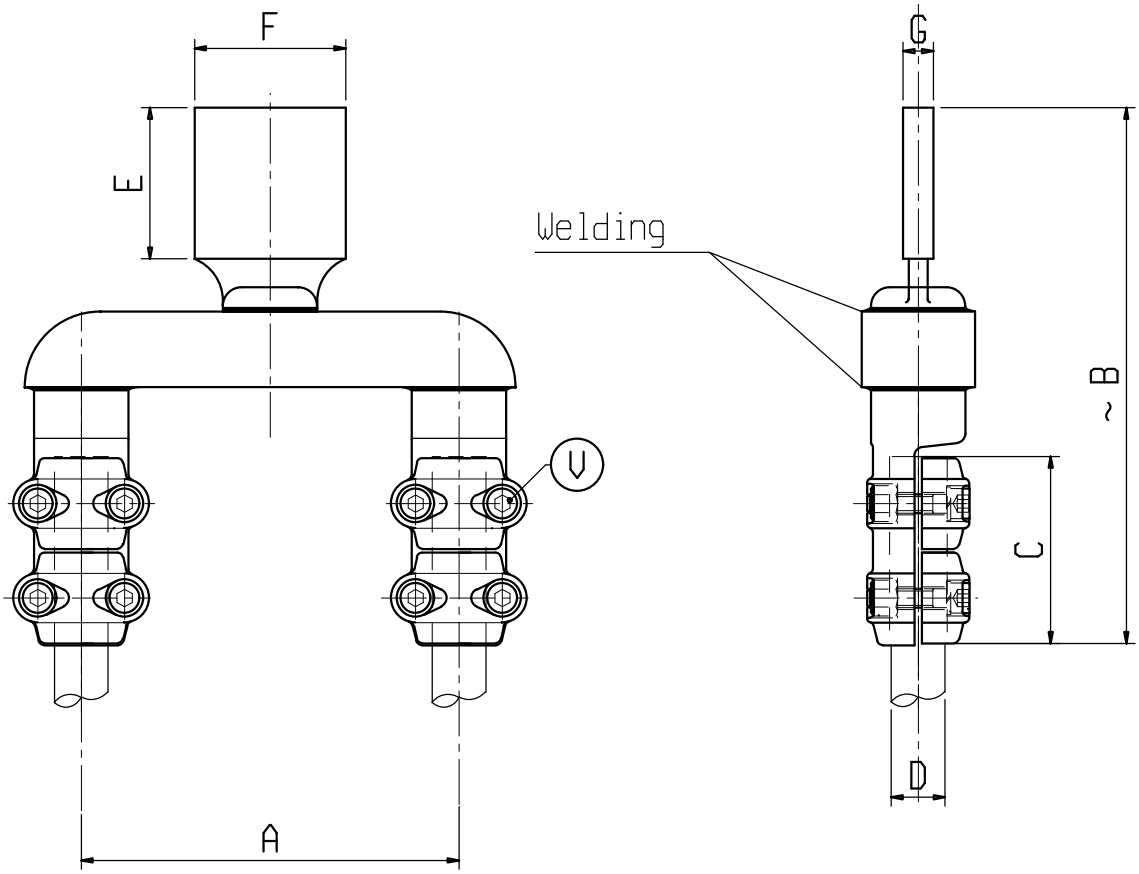

Material: Aluminium alloy

Bolts: Stainless steel

X	ø COND. D	A	B	C	E	F	G	V	X	ø COND. D	A	B	C	E	F	G	V
C 0145AA	20-25	200	305	100	100	100	14	M10									