s.r.l. GORLA MORSETTERIE MILANO TECHNICAL OFFICE	90° EXPANSION CONNECTOR FOR Cu FLAT AND Cu TUBE	DRG. N. 40/BB/X SCALE . DRAWN . / DATE . APPROVED . / DATE .

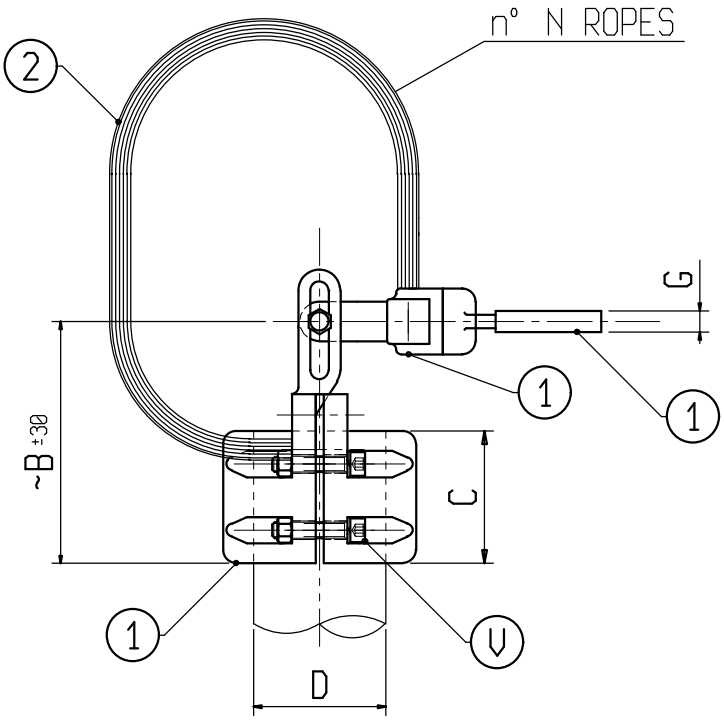

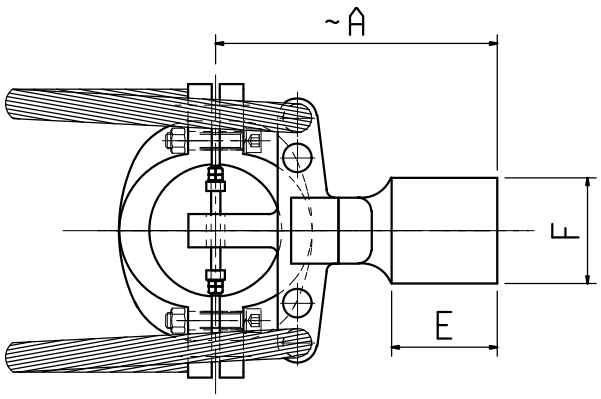

Material: 1 Copper alloy; 2 Copper

Bolts: Stainless steel

X	ø COND. D	A	B	C	E	F	G	N	V	X	ø COND. D	A	B	C	E	F	G	N	V
C 1048BB	40	260	170	100	100	100	10	2	M10										