s.r.l. GORLA MORSETTERIE MILANO TECHNICAL OFFICE	90° EXPANSION CONNECTOR FOR Al FLAT AND Al TUBE	DRG. N. 40/AA/X SCALE . DRAWN . / DATE . APPROVED . / DATE .

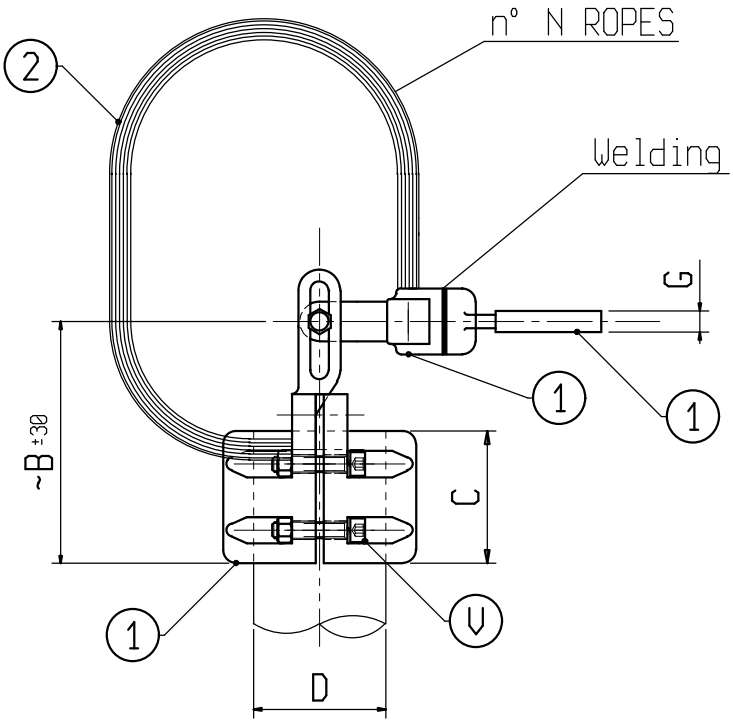

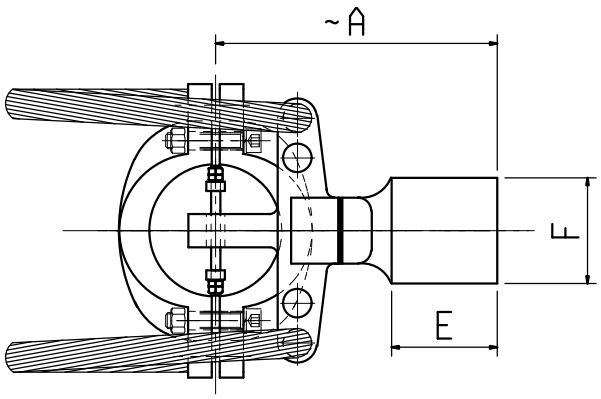

Material: 1 Aluminium alloy; 2 Aluminium

Bolts: Stainless steel

X	ø COND. D	A	B	C	E	F	G	N	V	X	ø COND. D	A	B	C	E	F	G	N	V
C 1048AA	40	260	170	100	100	100	10	2	M10	C 5968AA	100	265	170	100	105	185	16	4	M12
C 1049AA	70	260	170	100	100	100	16	2	M10										
C 1052AA	100	260	170	100	100	100	16	4	M12										