| s.r.l. GORLA<br>MORSETTERIE<br>MILANO<br>TECHNICAL OFFICE | 90° EXPANSION CONNECTOR<br>FOR Cu STUD<br>AND Cu TUBE | DRG. N. 39/BB/X<br>SCALE .<br>DRAWN . / DATE .<br>APPROVED . / DATE . |
|---|---|---|

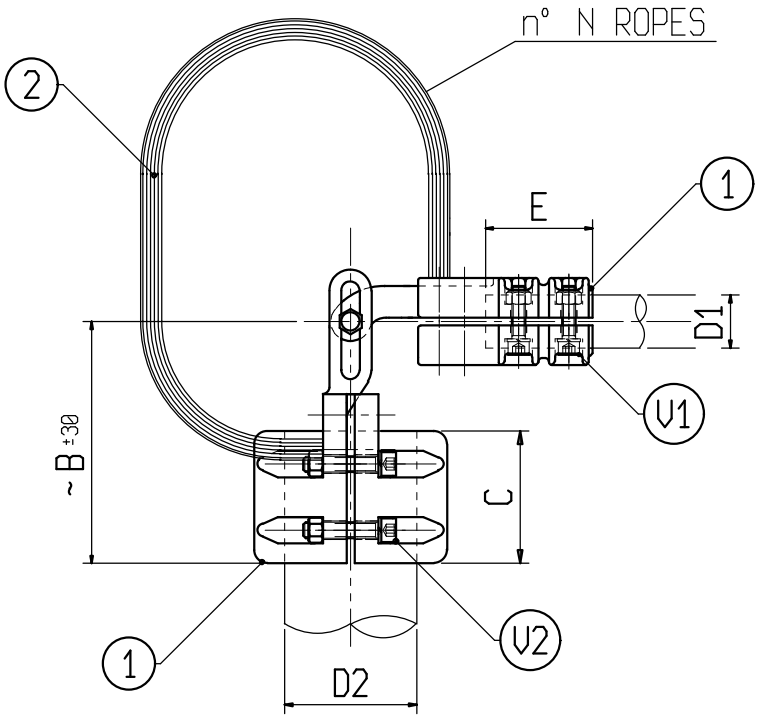


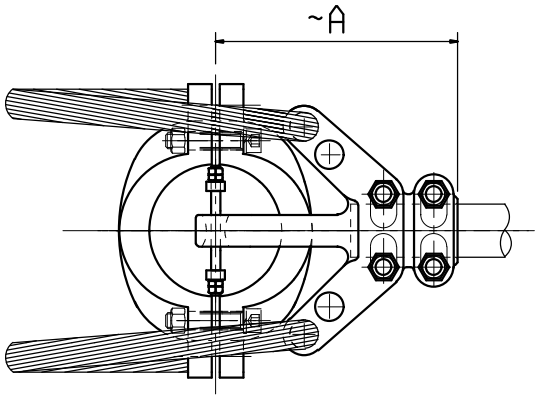


Material: 1 Copper alloy; 2 Copper

Bolts: Stainless steel

| X | ø CONDUCTOR | | A | B | C | E | N | V1 | V2 | X | ø CONDUCTOR | | A | B | C | E | N | V1 | V2 |
|---|---|---|---|---|---|---|---|---|---|---|---|---|---|---|---|---|---|---|---|
| | D1 | D2 | | | | | | | | | D1 | D2 | | | | | | | |
| C 1040BB | 30 | 30 | 190 | 170 | 100 | 75 | 2 | M10 | M10 | C 6484BB | 40 | 40 | 190 | 170 | 100 | 75 | 2 | M10 | M10 |
| C 6850BB | 30 | 40 | 190 | 170 | 100 | 75 | 2 | M10 | M10 | | | | | | | | | | |
| C 1044BB | 40 | 30 | 190 | 170 | 100 | 75 | 2 | M10 | M10 | | | | | | | | | | |