| s.r.l. GORLA<br>MORSETTERIE MILANO<br>TECHNICAL OFFICE | EXPANSION STRAIGHT<br>CONNECTOR<br>FOR Cu FLAT<br>AND Cu TUBE | DRG. N. 38/BB/X<br>SCALE .<br>DRAWN . / DATE .<br>APPROVED . / DATE . |
|---|---|---|

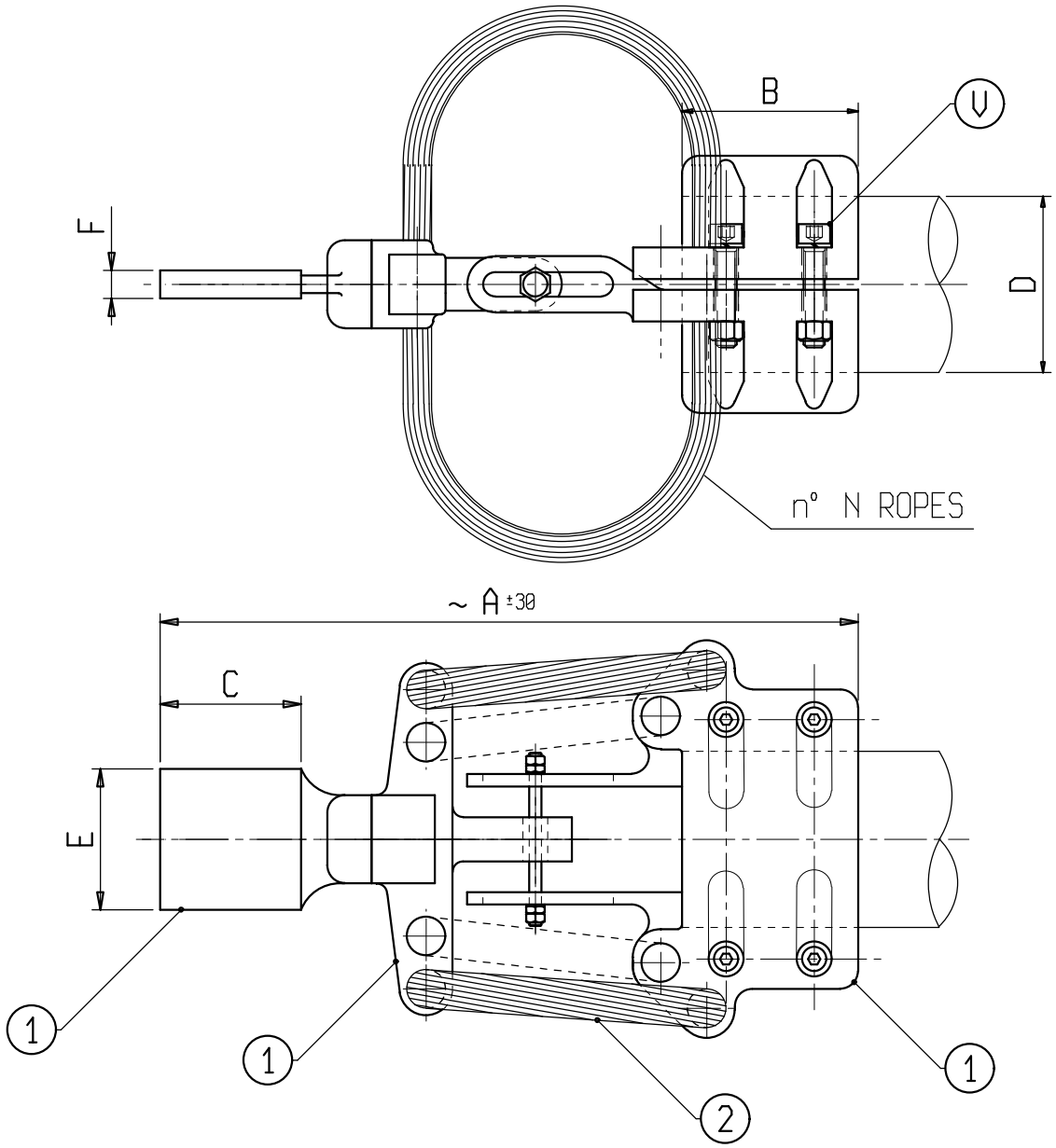


Material: 1 Copper alloy; 2 Copper

Bolts: Stainless steel

| X | ø COND. D | A | B | C | E | F | N | V | X | ø COND. D | A | B | C | E | F | N | V |
|---|---|---|---|---|---|---|---|---|---|---|---|---|---|---|---|---|---|
| C 6668BB | 40 | 430 | 100 | 100 | 100 | 10 | 2 | M10 | | | | | | | | | |
| | | | | | | | | | | | | | | | | | |
| | | | | | | | | | | | | | | | | | |