s.r.l. GORLA MORSETTERIE MILANO TECHNICAL OFFICE	EXPANSION STRAIGHT CONNECTOR FOR Cu STUD AND Cu TUBE	DRG. N. 37/BB/X SCALE . DRAWN . / DATE . APPROVED . / DATE .

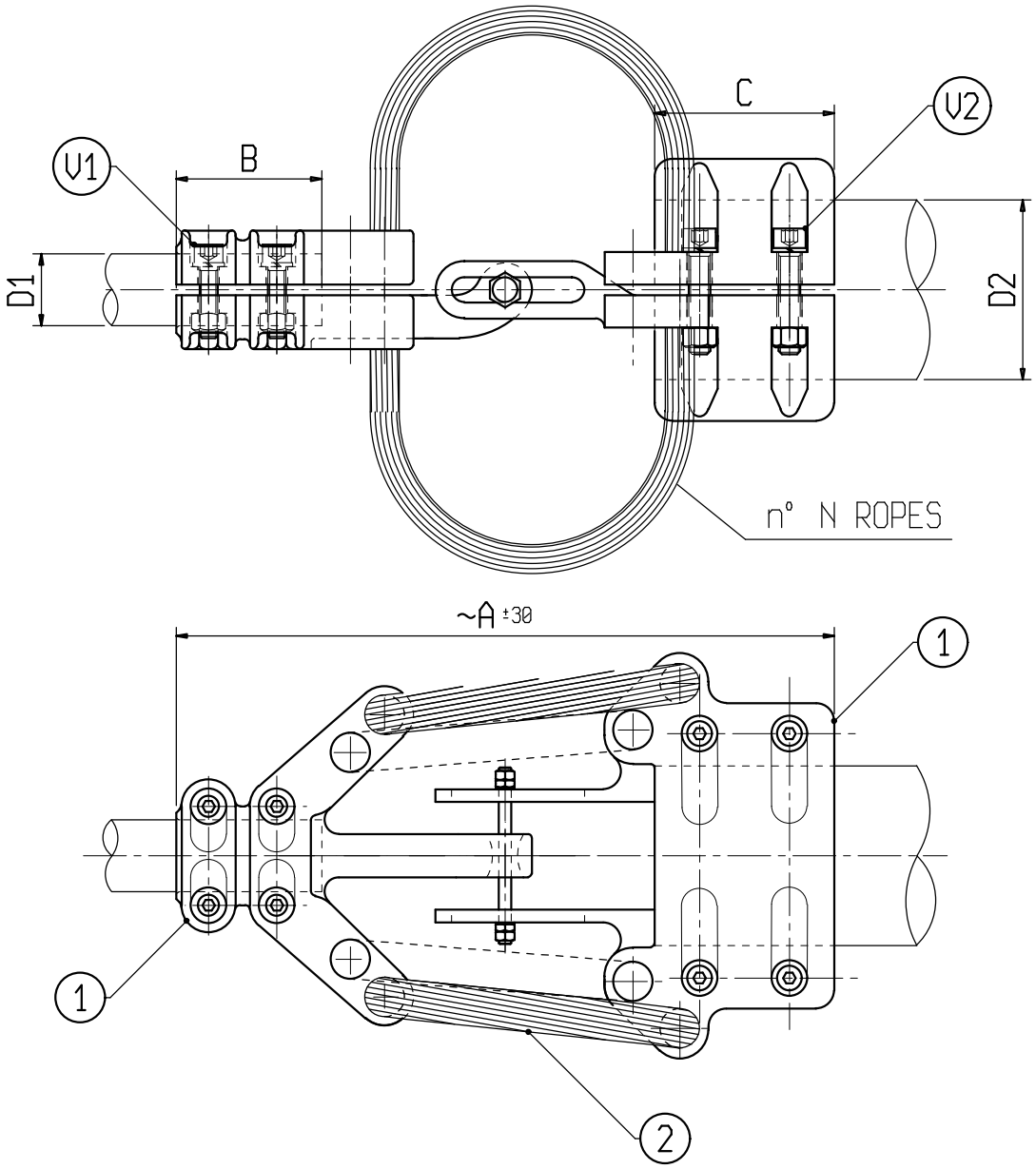

Material: 1 Copper alloy; 2 Copper

Bolts: Stainless steel

X	ø CONDUCTOR		A	B	C	N	V1	V2	X	ø CONDUCTOR		A	B	C	N	V1	V2
	D1	D2								D1	D2						
C 1033BB	30	30	360	75	100	2	M10	M10	C 5296BB	40	40	360	75	100	2	M10	M10
C 6696BB	30	40	360	75	100	2	M10	M10									
C 6373BB	40	30	360	75	100	2	M10	M10									