s.r.l. GORLA MORSETTERIE MILANO TECHNICAL OFFICE	EXPANSION STRAIGHT CONNECTOR FOR Cu STUD AND Al TUBE	DRG. N. 37/BA/X SCALE . DRAWN . / DATE . APPROVED . / DATE .

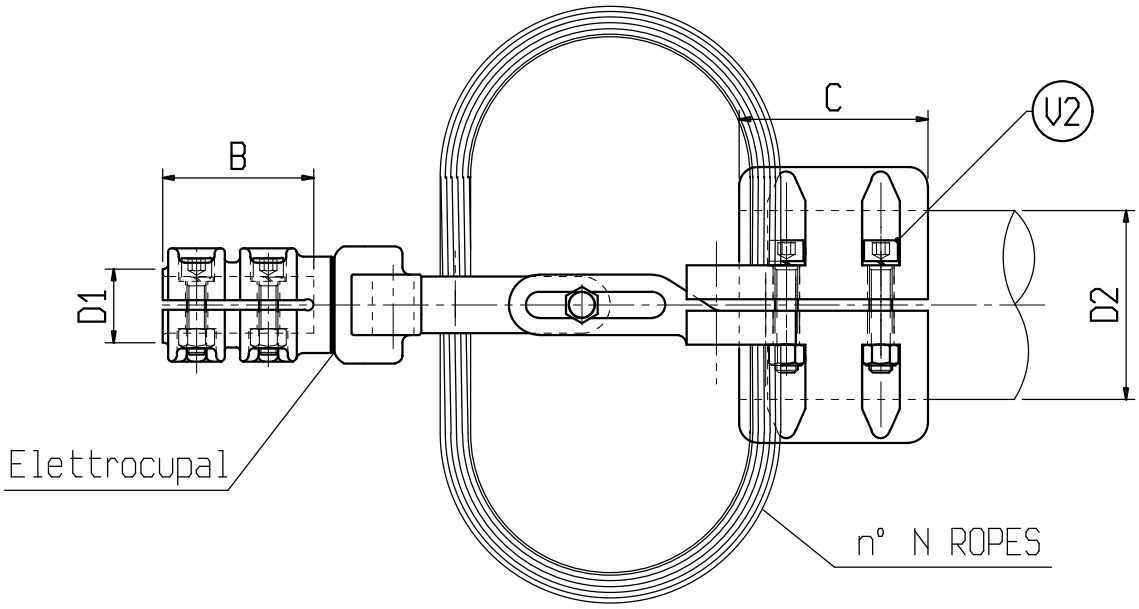

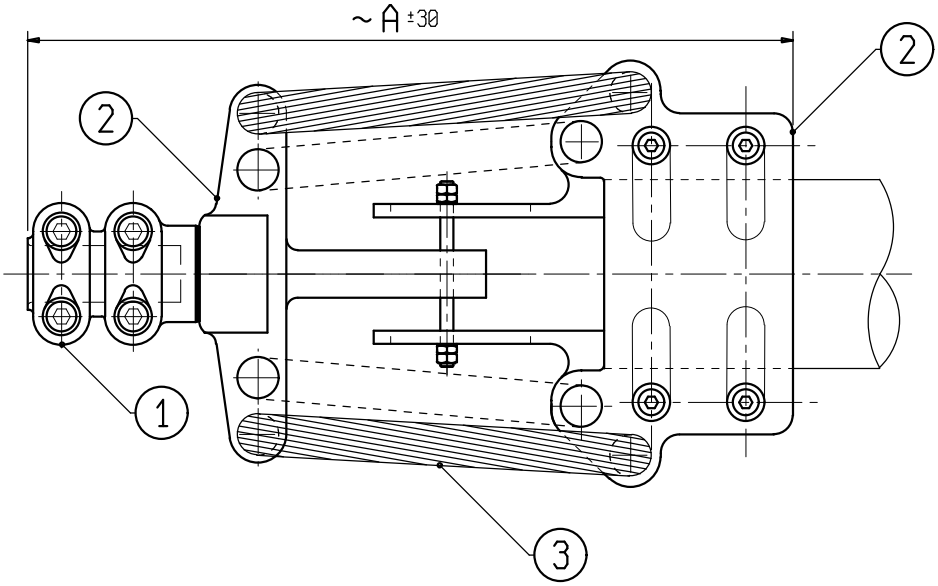

Material: 1 Copper alloy; 2 Aluminium alloy; 3 Aluminium

Bolts: Stainless steel

X	ø CONDUCTOR		A	B	C	N	V1	V2	X	ø CONDUCTOR		A	B	C	N	V1	V2
	D1	D2								D1	D2						
C 1033BA	30	30	400	80	100	2	M10	M10	C 5296BA	40	40	400	80	100	2	M10	M10
C 6696BA	30	40	400	80	100	2	M10	M10	C 1034BA	40	70	400	80	100	2	M10	M10
C 6701BA	30	70	400	80	100	2	M10	M10	C 5966BA	40	100	400	80	100	2	M10	M12
C 5980BA	30	100	400	80	100	2	M10	M12									
C 6373BA	40	30	400	80	100	2	M10	M10									