s.r.l. GORLA MORSETTERIE MILANO TECHNICAL OFFICE	OSCILLATING BUS SUPPORT FOR STRAIGHT CONNECTION Al TUBE	DRG. N. 33/AA/X SCALE . DRAWN . / DATE . APPROVED . / DATE .

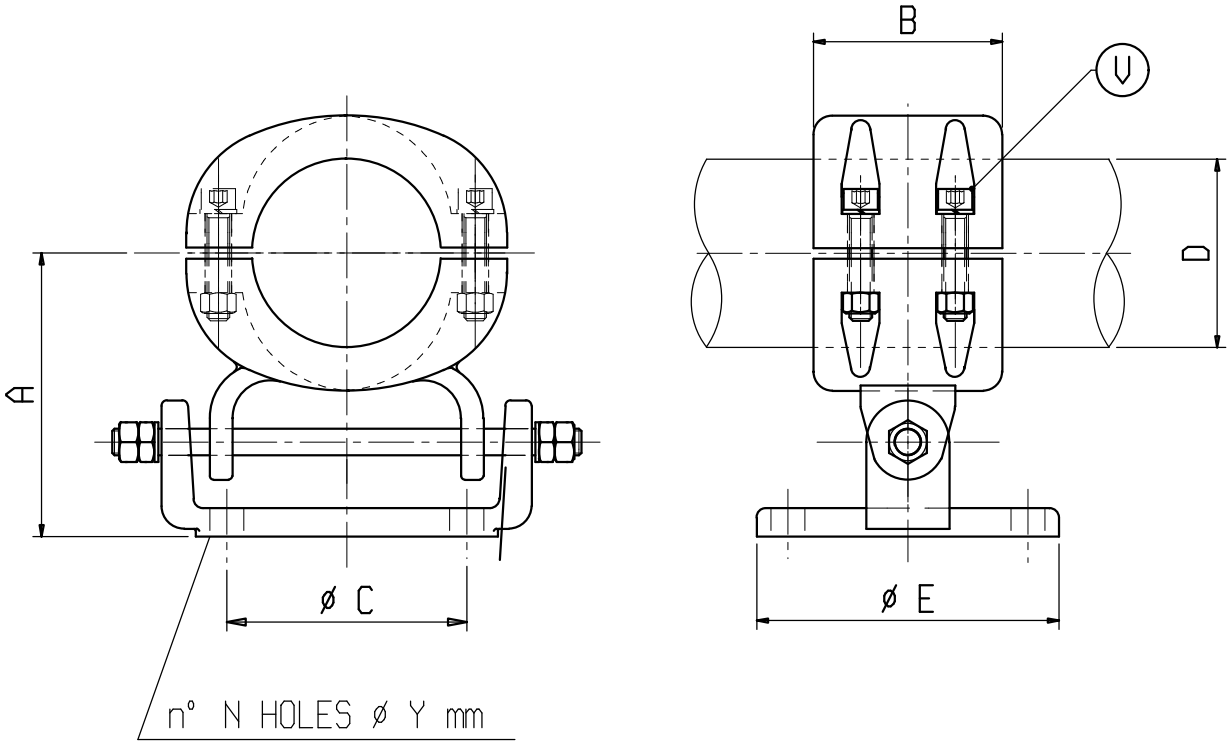

Material: Aluminium alloy

Bolts: Stainless steel

X	ø COND. D	A	B	C	E	N	Y	V	X	ø COND. D	A	B	C	E	N	Y	V
C 1027	40	150	100	127	160	4	18	M10									
C 1028	100	150	100	127	160	4	18	M12									