s.r.l. GORLA MORSETTERIE MILANO TECHNICAL OFFICE	45° CONNECTOR PER Cu STUD AND Cu FLAT	DRG. N. 28/BB/X SCALE . DRAWN . / DATE . APPROVED . / DATE .

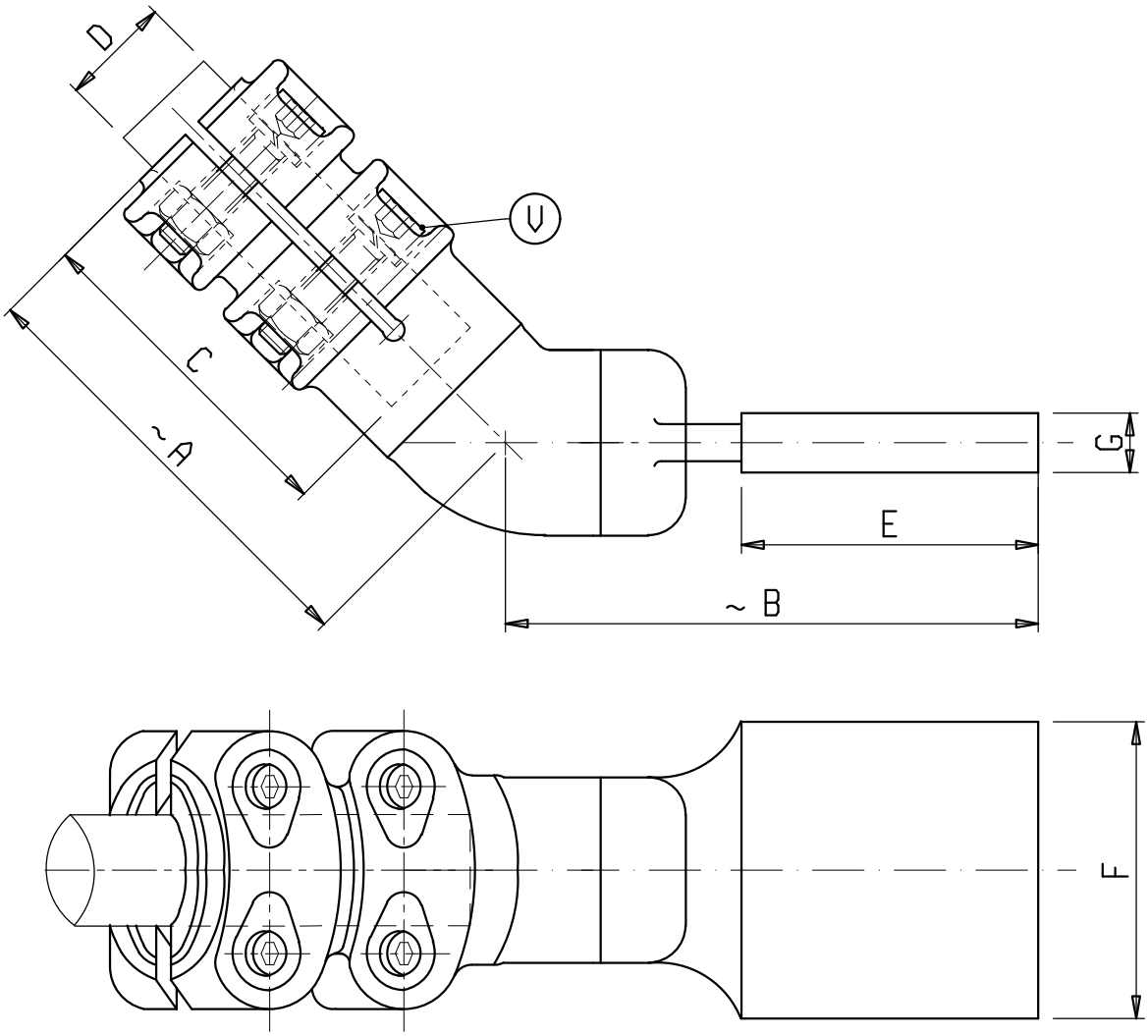

Material: Copper alloy

Bolts: Stainless steel

X	ø COND. D	A	B	C	E	F	G	V	X	ø COND. D	A	B	C	E	F	G	V
C 1009BB	20	120	165	80	100	100	10	M10									
C 1010BB	30	120	165	80	100	100	10	M10									
C 1011BB	40	120	145	80	80	80	10	M10									