s.r.l. GORLA MORSETTERIE MILANO TECHNICAL OFFICE	PREFORMED TIES	DRG. N. 10/LR/X Rev.1 dated 22.04.15 Page 1/2

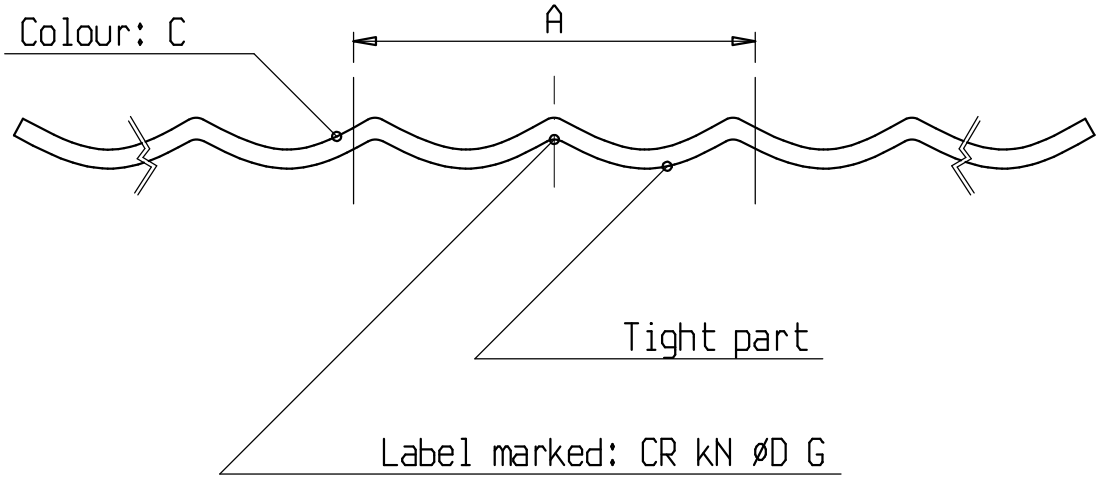

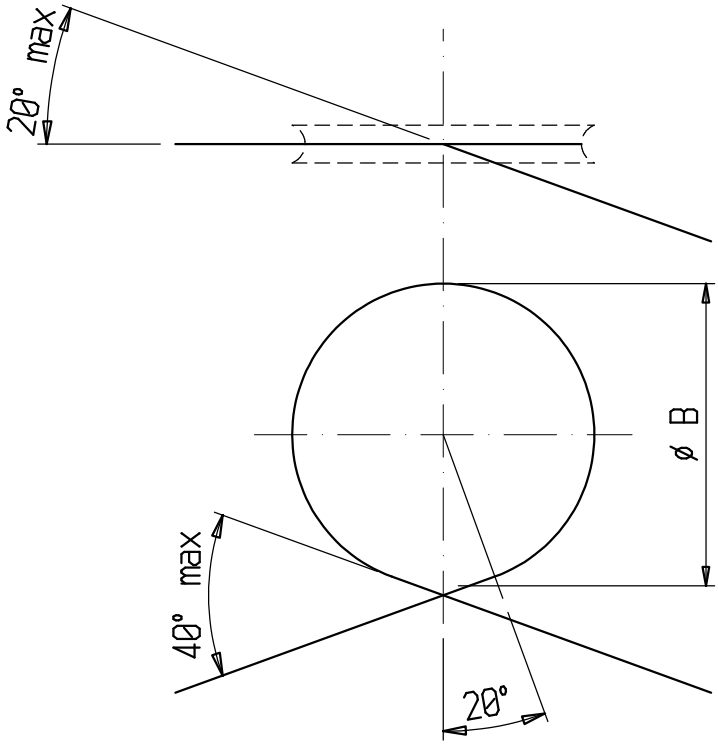

s.r.l. GORLA
MORSETTERIE MILANO

TECHNICAL OFFICE

PREFORMED TIES

DRG. N. 10/LR/X

Rev.1 dated 22.04.15

X	Mat./Sect. COND.[mm2]	ø COND. D	A	B	C	Wire mat.	N. Wire	Type	CR [kN]	TAB.	MATR.
LR 1343-6	Cu 16	4.50	130	40	White/Orange	Inox	3	Comp.ins.	2.5	DM3182/1	269640
LR 1343-7	Cu 25	6.42	130	40	Orange/Green	Inox	3	Comp.ins.	4.0	DM3182/2	269642
LR 1343-8	Cu 35	7.56	130	40	Green/Purple	Inox	4	Comp.ins.	5.0	DM3182/3	269644
LR 1343-3	Aldrey 35	7.56	130	40	Purple/Pink	Lega Al	3	Comp.ins.	4.0	DM3182/4	269646
LR 1343-1	Compact 30	6.50	130	40	Blue/Red	Lega Al	3	Comp.ins.	3.5	DM3182/5	269648
LR 1343-2	Compat.60	8.80	130	40	Cyan/Yellow	Lega Al	4	Comp.ins.	5.0	DM3182/6	269650
LR 1343-4	ACSR 54,6	9.45	130	40	Black/White	ACS	4	Comp.ins.	5.0	DM3182/7	269013
LR 1344-1	Compat.30	6.50	1870	-	Red/Green	Lega Al	3	Lozenge comp.in.	3.5	DM3184/3	269634
LR 1344-2	Compat.60	8.80	1870	-	Green/Cyan	Lega Al	4	Lozenge comp.in.	5.0	DM3184/4	269636
LR 1344-3	Aldrey 35	7.56	1870	-	Blue/Yellow	Lega Al	3	Lozenge comp.in.	4.0	DM3184/5	269638
LR 1344-4	ACSR 54,6	9.45	1870	-	White/Black	ACS	4	Lozenge comp.in.	5.0	DM3184/6	269014
LR 0183-5	Cu 16	4.50	360	115	White	Inox	3	Glass ins.	2.5	DM3185/1	269600
LR 0183-6	Cu 25	6.42	360	115	Orange	Inox	3	Glass ins.	4.0	DM3185/2	269601
LR 0183-7	Cu 35	7.56	360	115	Green	Inox	4	Glass ins.	5.0	DM3185/3	269602
LR 0183-3	Aldrey 35	7.56	360	115	Purple	Lega Al	3	Glass ins.	4.0	DM3185/4	269603
LR 0183-1	Compat.30	6.50	360	115	Blue	Lega Al	3	Glass ins.	3.5	DM3185/5	269605
LR 0183-2	Compat.60	8.80	360	115	Cyan	Lega Al	4	Glass ins.	5.0	DM3185/6	269606
LR 0183-4	ACSR 54,6	9.45	360	115	Yellow	ACS	4	Glass ins.	5.0	DM3185/9	269012
LR 0242-5	Cu 16	4.50	2100	-	White	Inox	3	Lozenge glass in.	2.5	DM3186/1	269604
LR 0242-6	Cu 25+XLPE	6.42	2100	-	Yellow	Inox	3	Lozenge glass in.	4.0	DM3186/2	269614
LR 0242-1	Compat.30	6.50	2100	-	Red	Lega Al	3	Lozenge glass in.	3.5	DM3186/3	269616
LR 0242-2	Compat.60	8.80	2100	-	Green	Lega Al	4	Lozenge glass in.	5.0	DM3186/4	269618
LR 0242-4	Comp.30+XLPE	6.50	2100	-	Blue	Lega Al	3	Lozenge glass in.	3.5	DM3186/5	269620
LR 0242-3	ACSR 54,6	9.45	2100	-	Black	ACS	4	Lozenge glass in.	5.0	DM3186/6	269011
LR 0419	ACSR 70	11.60	400	-	Coral	ACS	4	Glass ins.	9.0	DM3185/11	Romania